ASSEMBLY INSTRUCTION

SKU CODE: (WF287343)

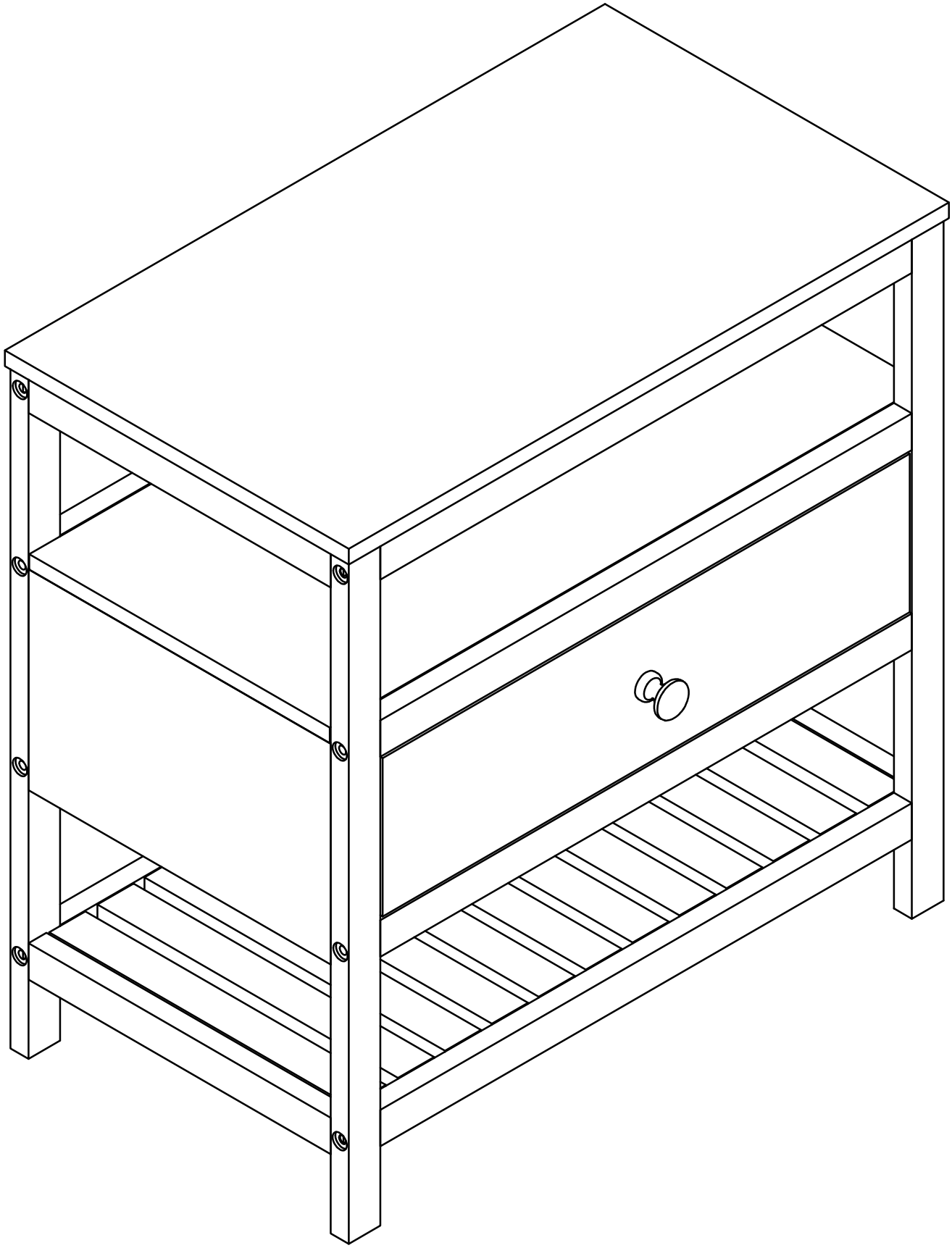

ASSEMBLY INSTRUCTION

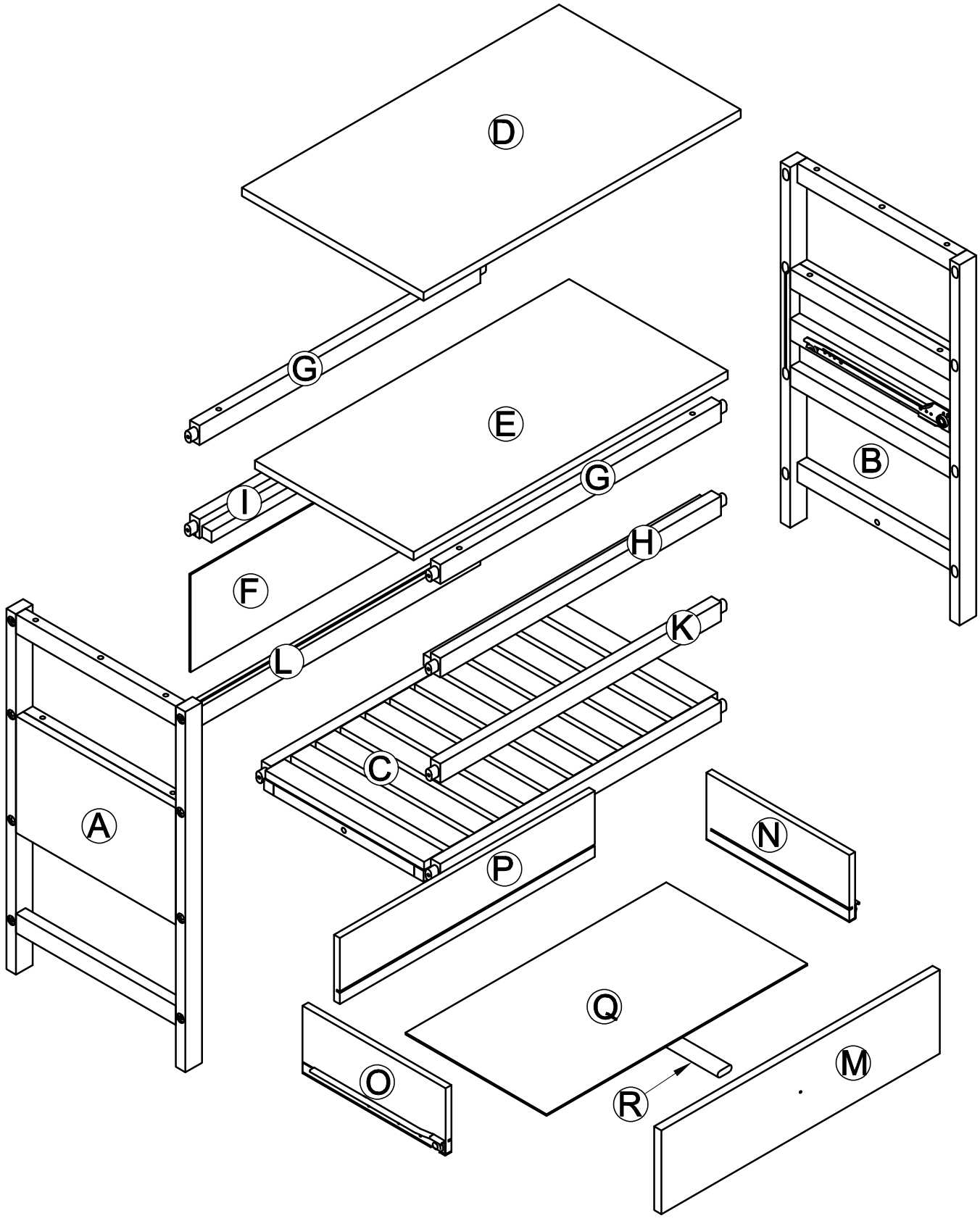

02/10

Part List & Hardware List (WF287343)

A 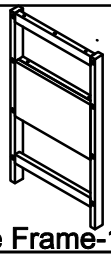 Side Frame-1pc	B 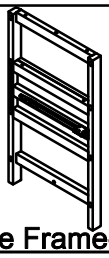 Side Frame-1pc	C 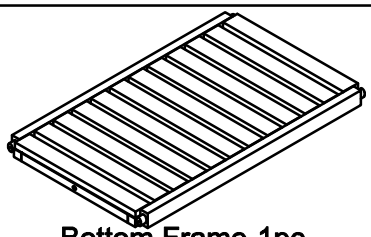 Bottom Frame-1pc
D 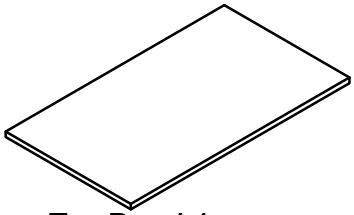 Top Panel-1pc	E 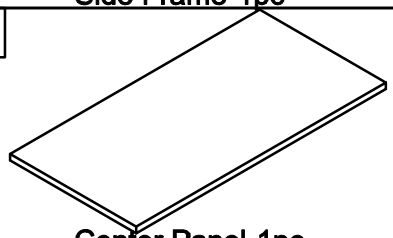 Center Panel-1pc	F 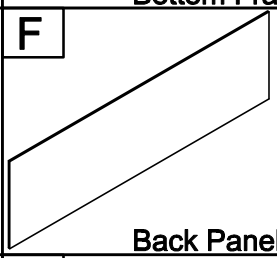 Back Panel-1pc
G 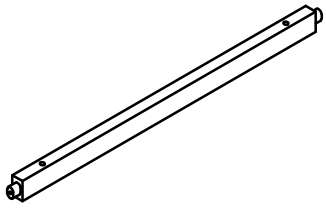 Wood Bars-2pcs	H 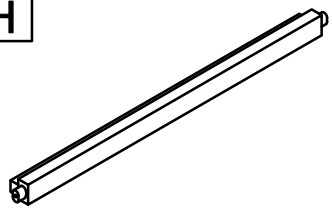 Wood Bar-1pc	I 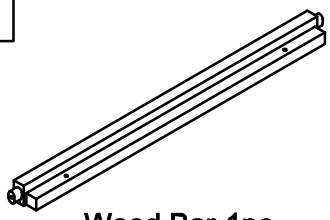 Wood Bar-1pc
K Wood Bar-1pc	L 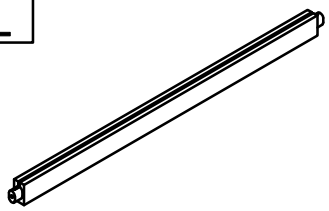 Wood Bar-1pc	M 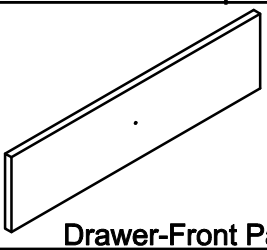 Drawer-Front Panel-1pc
N 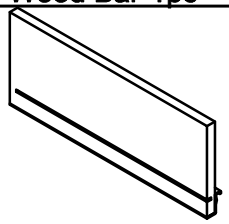 Drawer-Side Panel-1pc	O 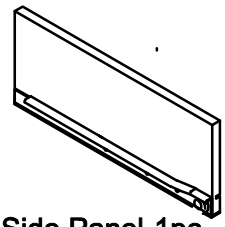 Drawer-Side Panel-1pc	P 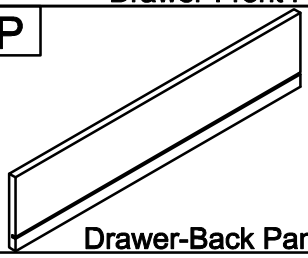 Drawer-Back Panel-1pc
Q 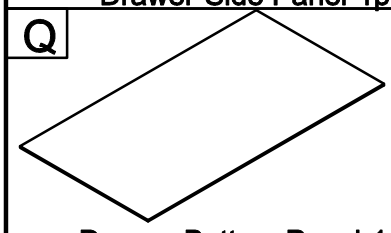 Drawer-Bottom Panel-1pc	R 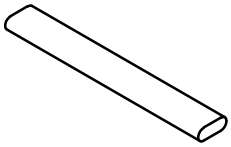 Drawer-Support Bottom Panel-1pc	

03/10

Hardware List(WF287343)

1 Screws 1/4" x60 16pcs	2 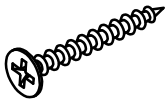 M4 x30 mm Wood Screws 13pcs	3 Ø1/4" x 45 mm Hex-Head bolts 12pcs
4 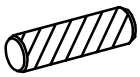 Ø8 x 30 mm Wood dowel 2pcs	5 Handle Steel 1pc	6 Ø1/6" x 20 mm Hex-Head bolts 1pc
7 Allen Key 1pc	8 Ø1/4" x 30 mm Hex-Head bolts 2pcs	

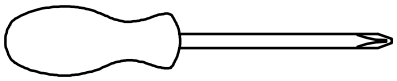

Assembly Tools Required (Not Included)

04/10

STEP 1: Following below illustration:

-Using Hardware #1,#8 conect B Frame with G(x2),H,I,K,L wood bar and C Frame

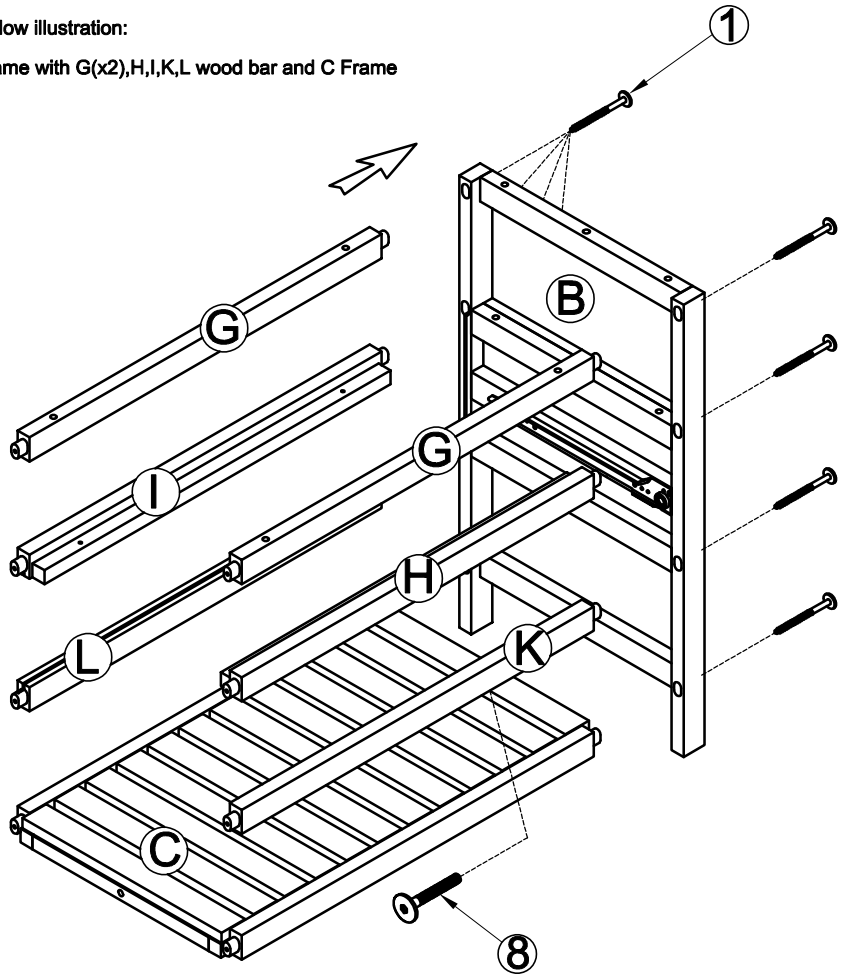

1

8(pcs)

8

1(pc)

STEP 2:

Push Back Panel F into it position

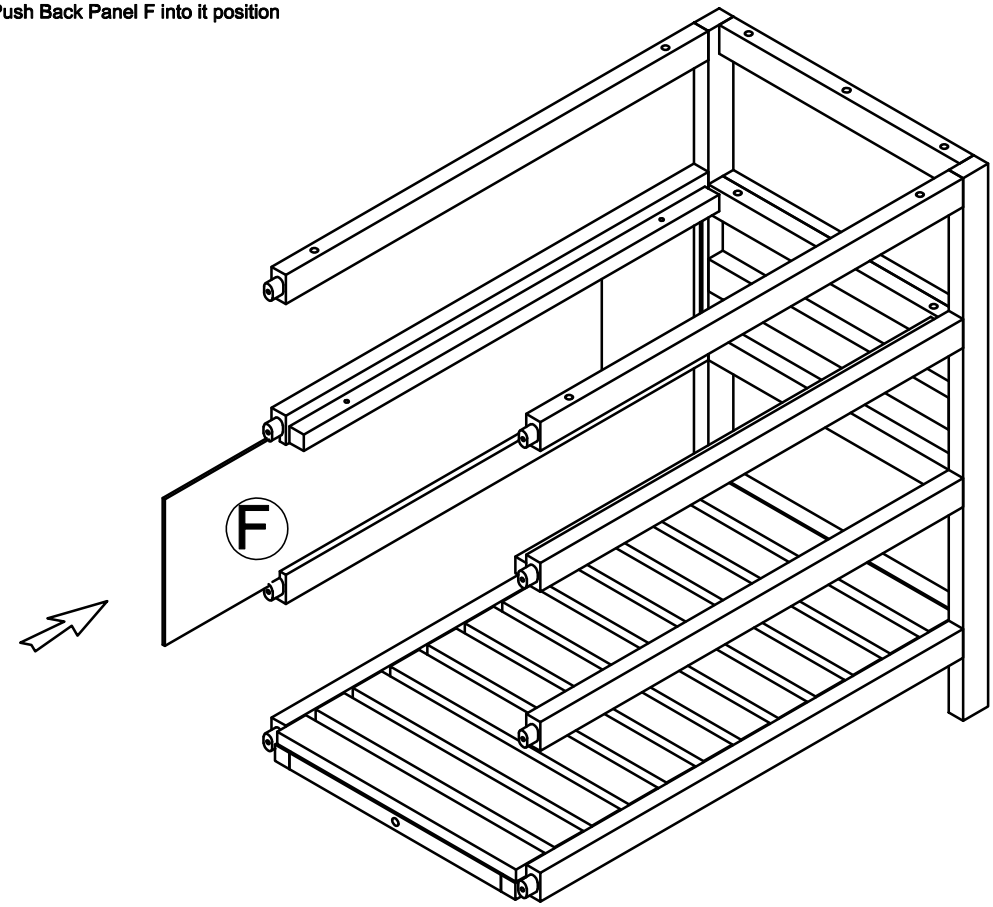

05/10

STEP 3: Following below illustration:

-Using Hardware #1,#8 conect A Frame with Frame(completed on step 2)

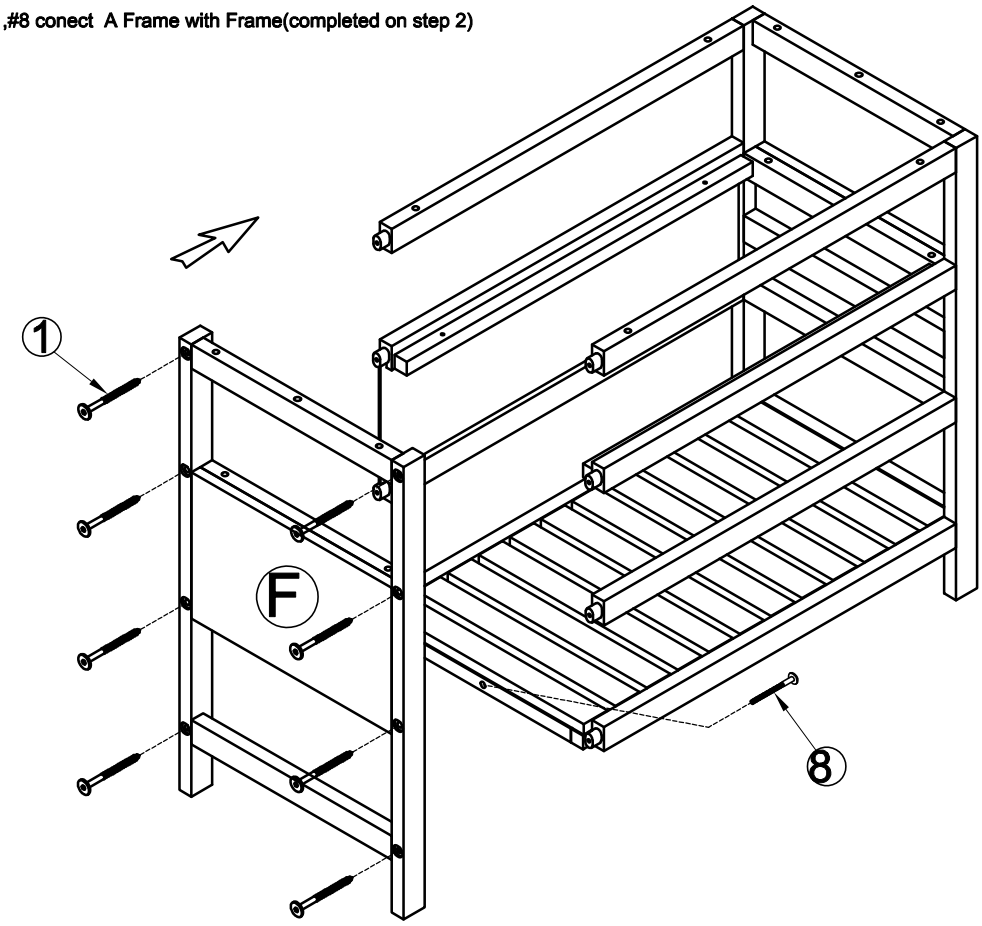

1	8
8(pcs)	1(pc)

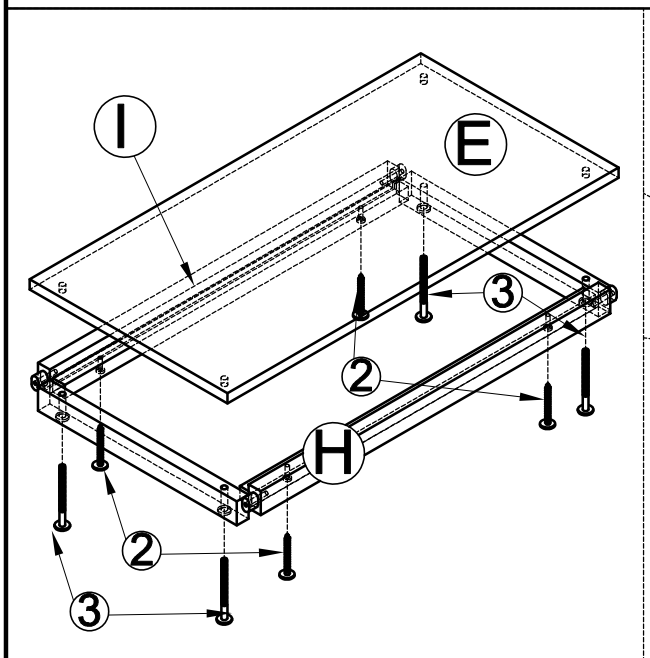

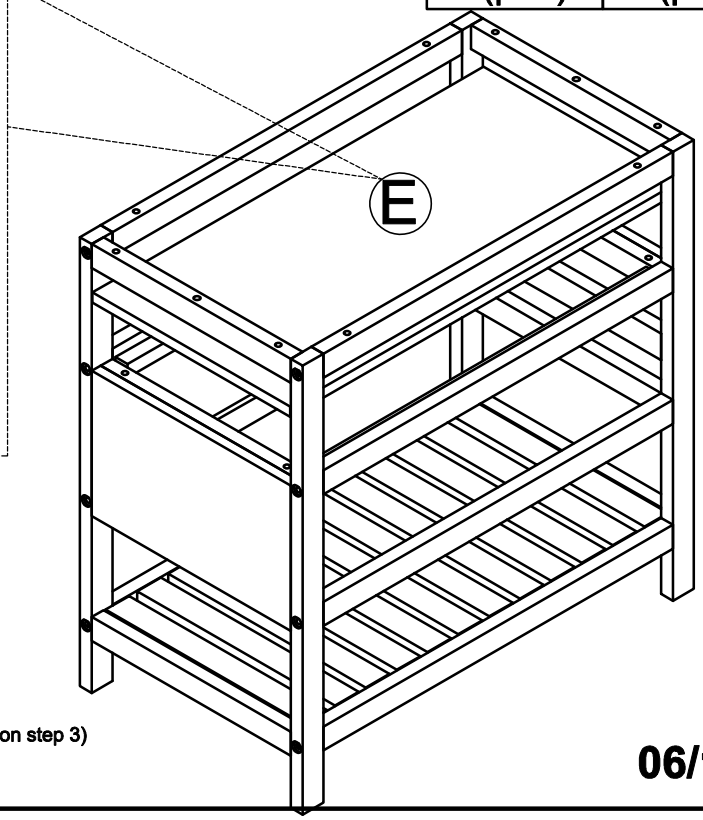

3	2
4(pcs)	4(pcs)

STEP 4: Following below illustration:

-Using Hardware #2,#3 conect Center Panle E with Frame(completed on step 3)

06/10

STEP 5: Following below illustration:

-Using Hardware #3 and Dowel #4 conect Top panels D with Frame(completed on step 4)

4	3
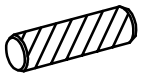	
2(pcs)	8(pcs)

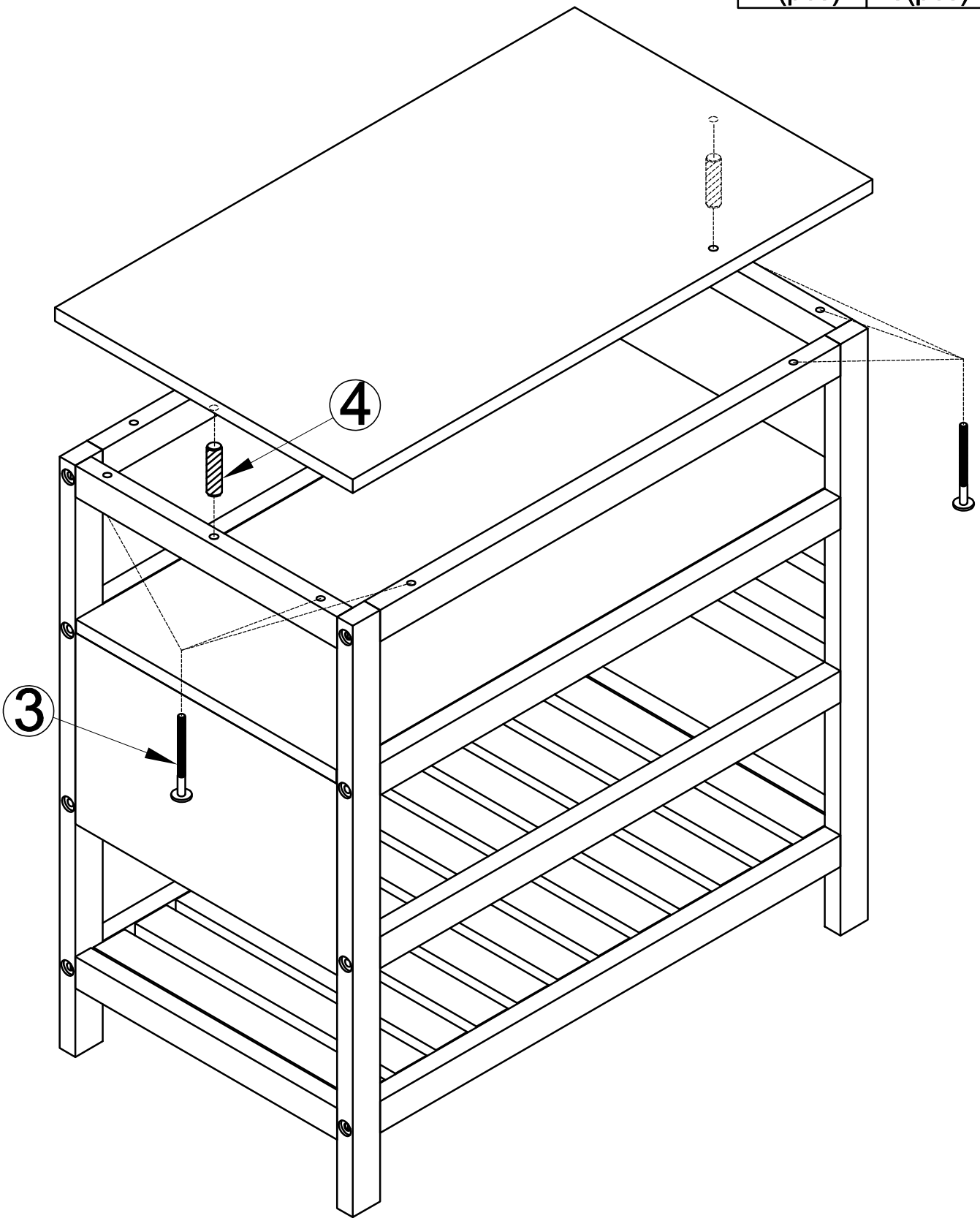

07/10

STEP 6-1:ASSEMBLY DRAWER

5	6
1(pc)	1(pc)

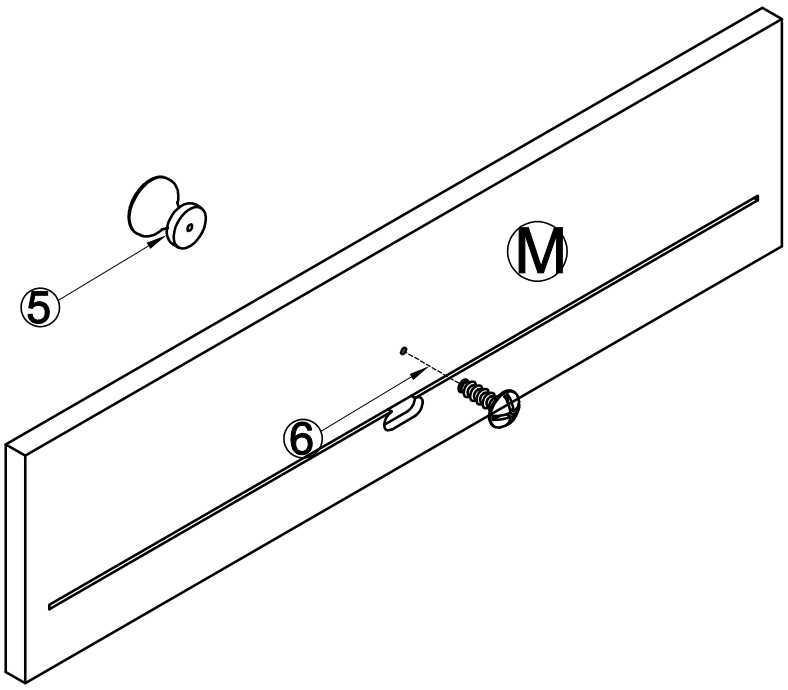

STEP 6-2:ASSEMBLY DRAWER

2
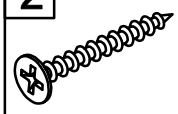
4(pcs)

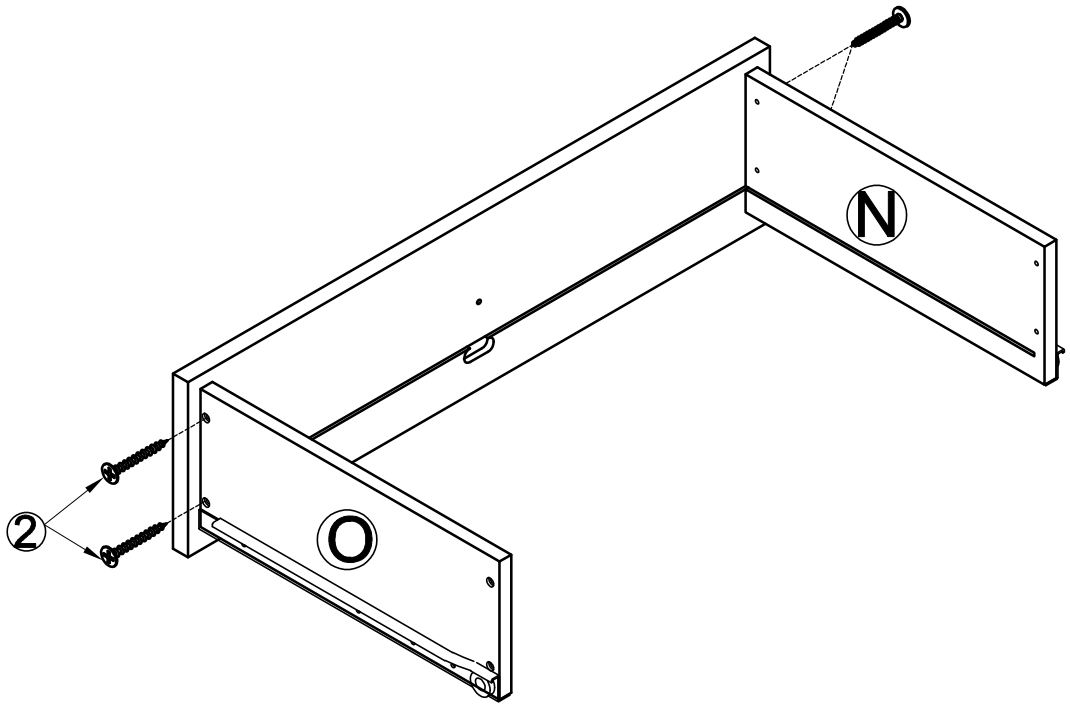

08/10

STEP 6-3:ASSEMBLY DRAWER

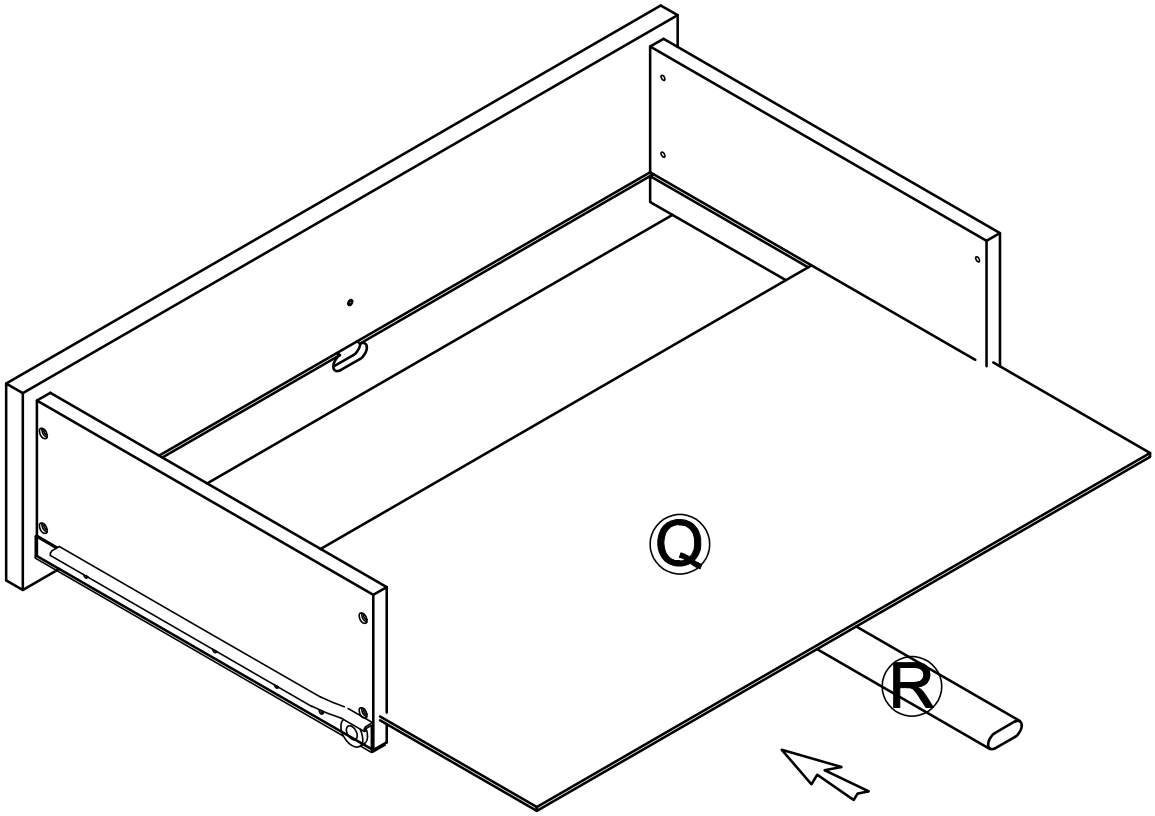

STEP 6-4:ASSEMBLY DRAWER

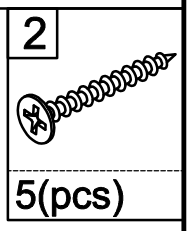

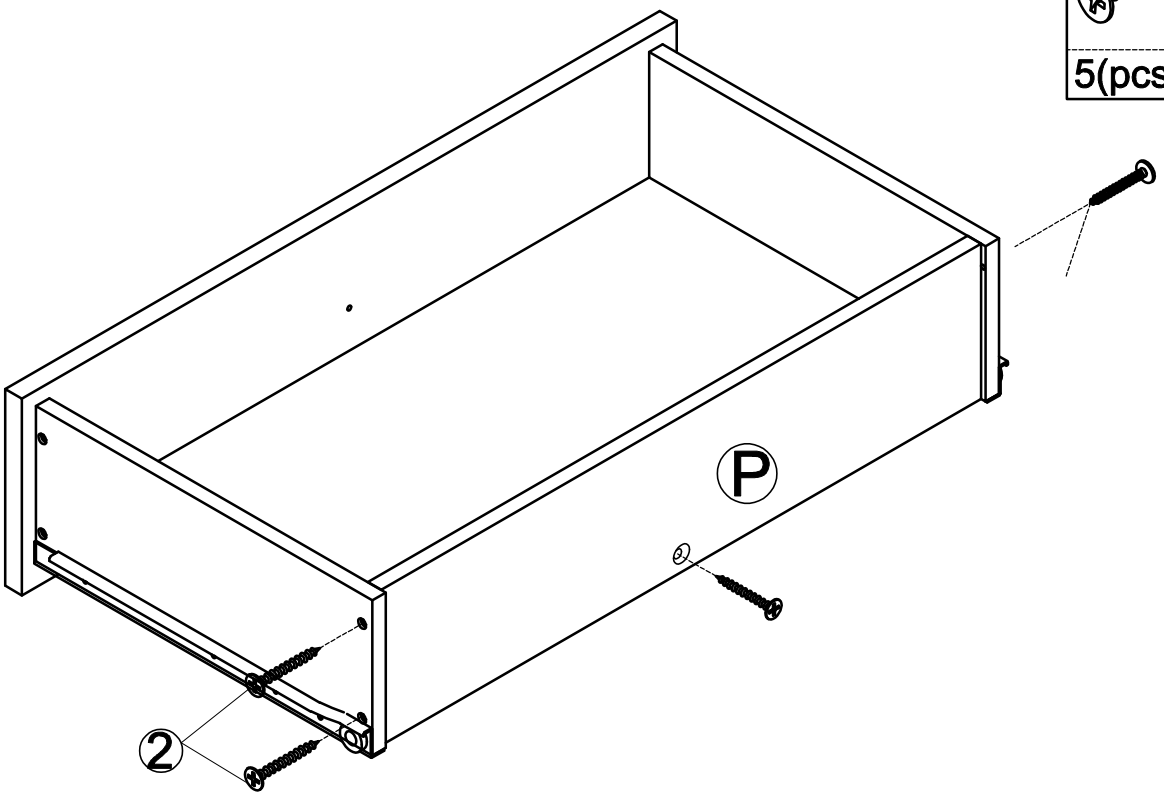

09/10

STEP 7: CONGRARULATION. YOU HAVE COMPLETED THE CABINET.
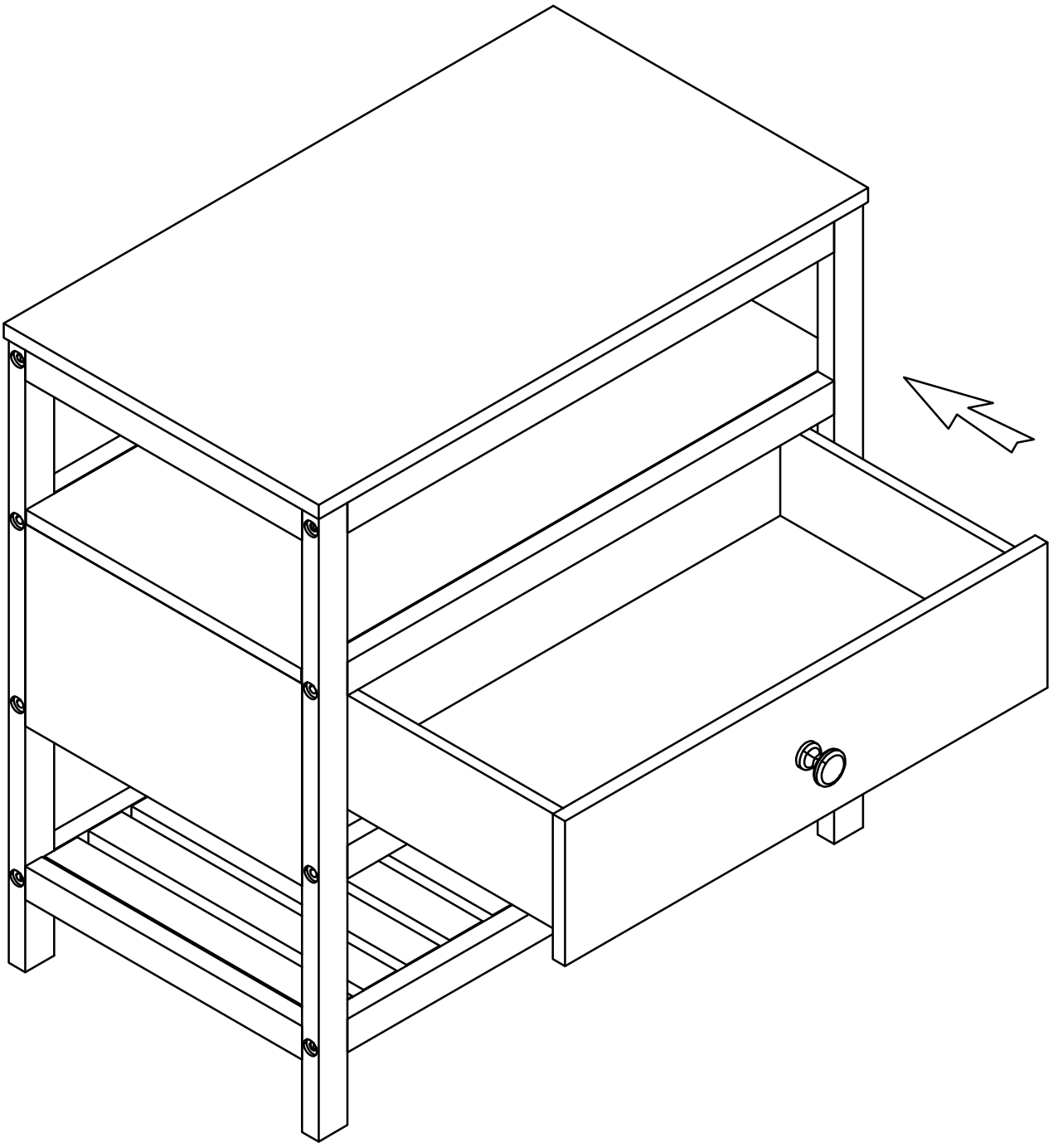
Push 1 drawer into it position